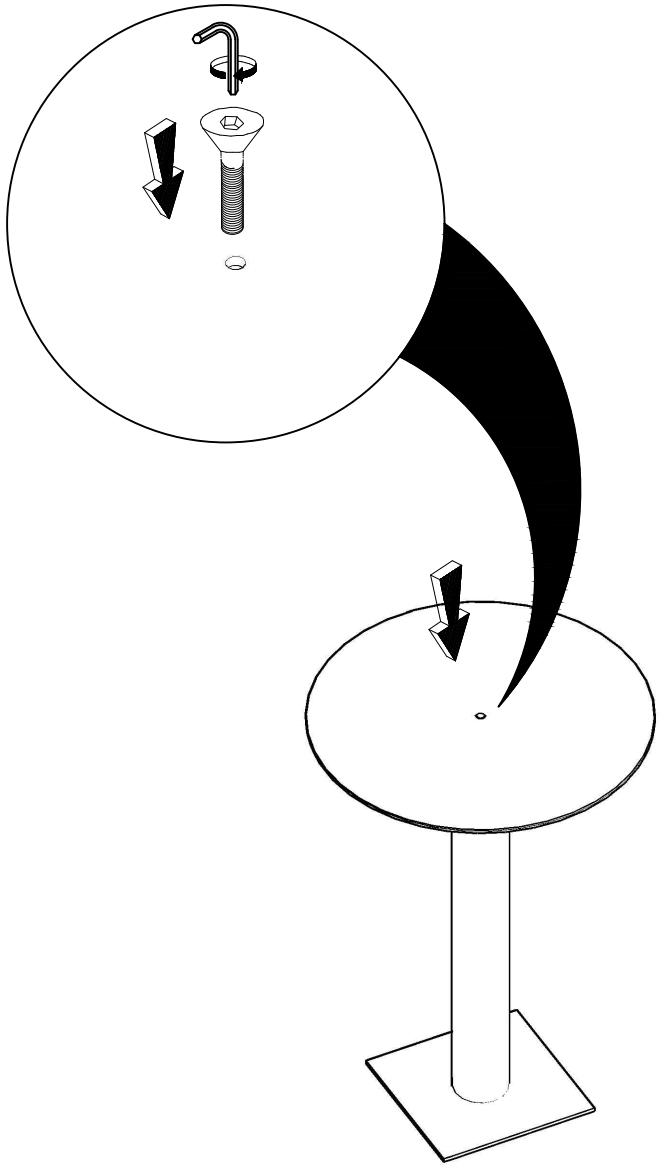

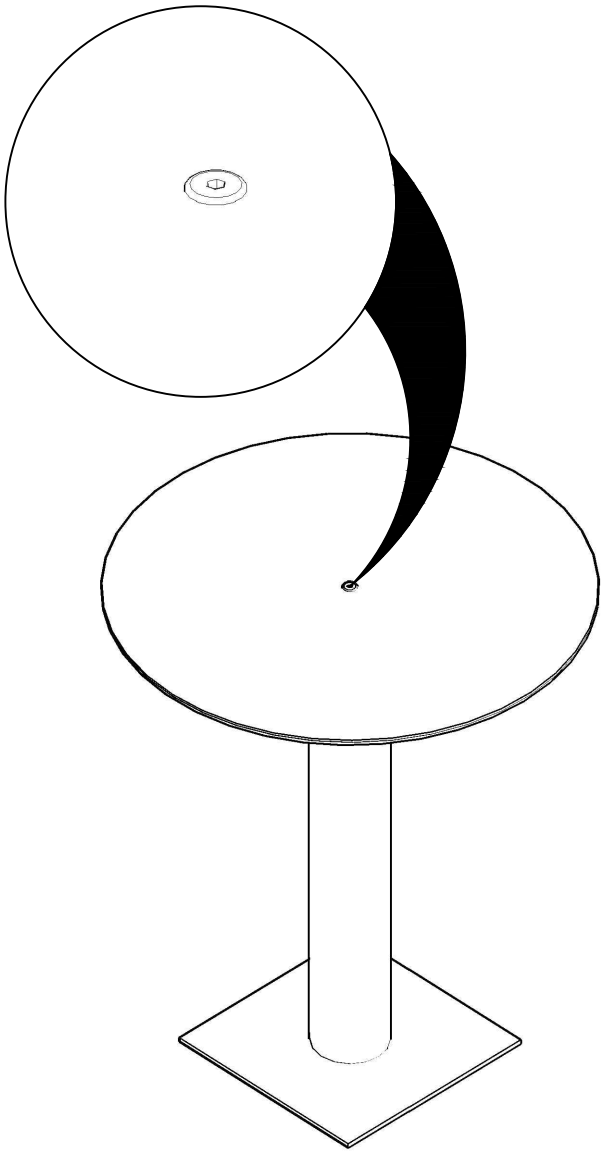

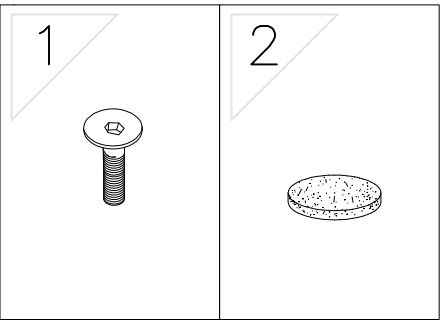
1
2

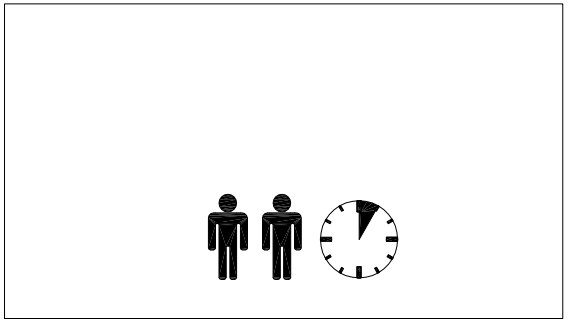

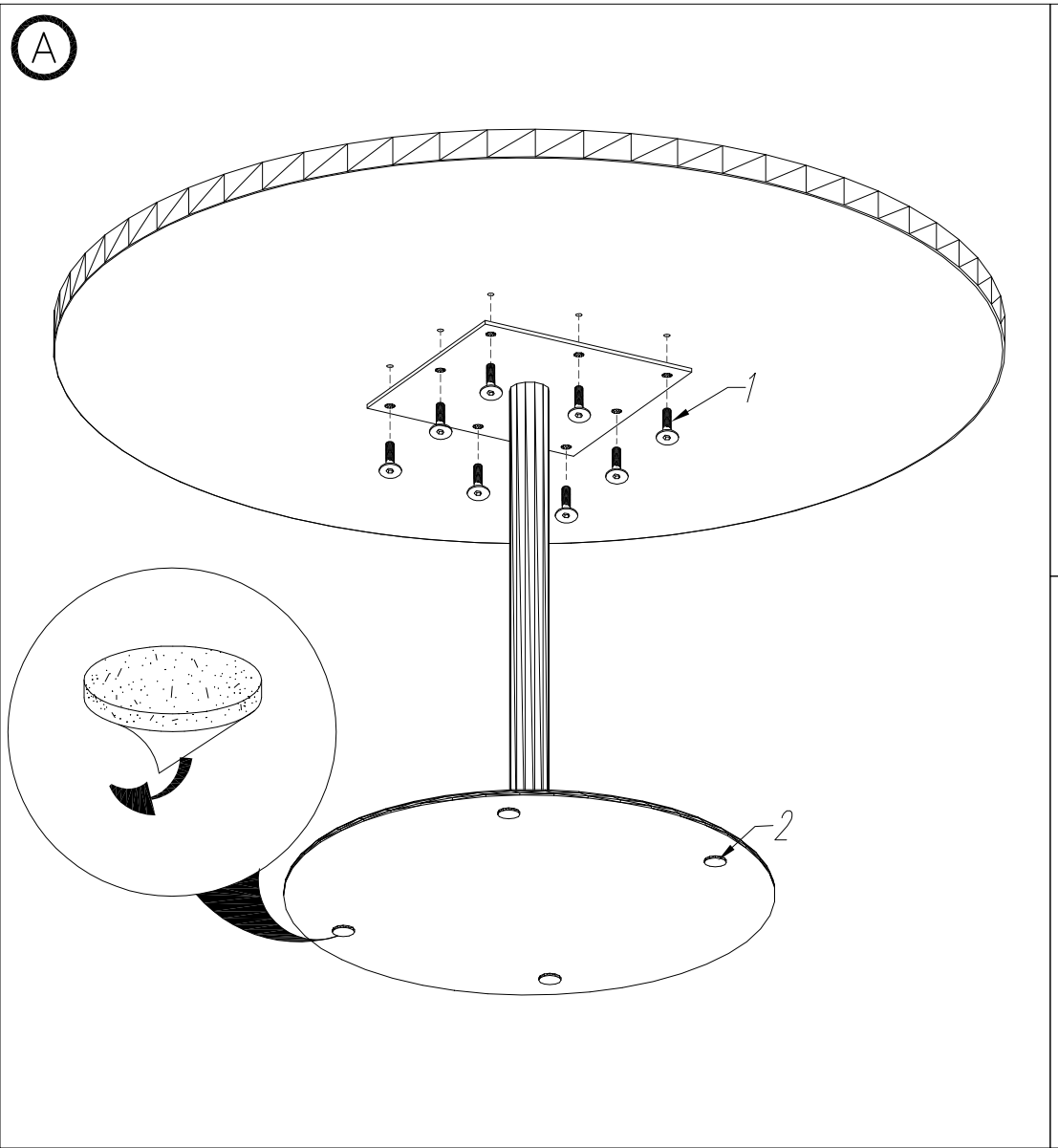
A
1
2

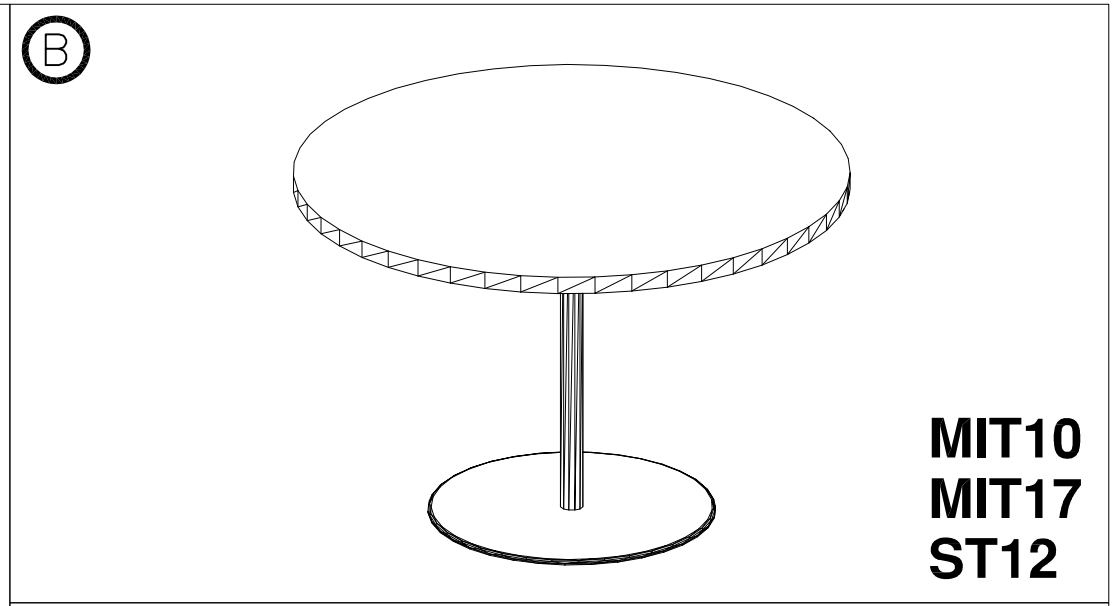
B
MIT10
MIT17
ST12

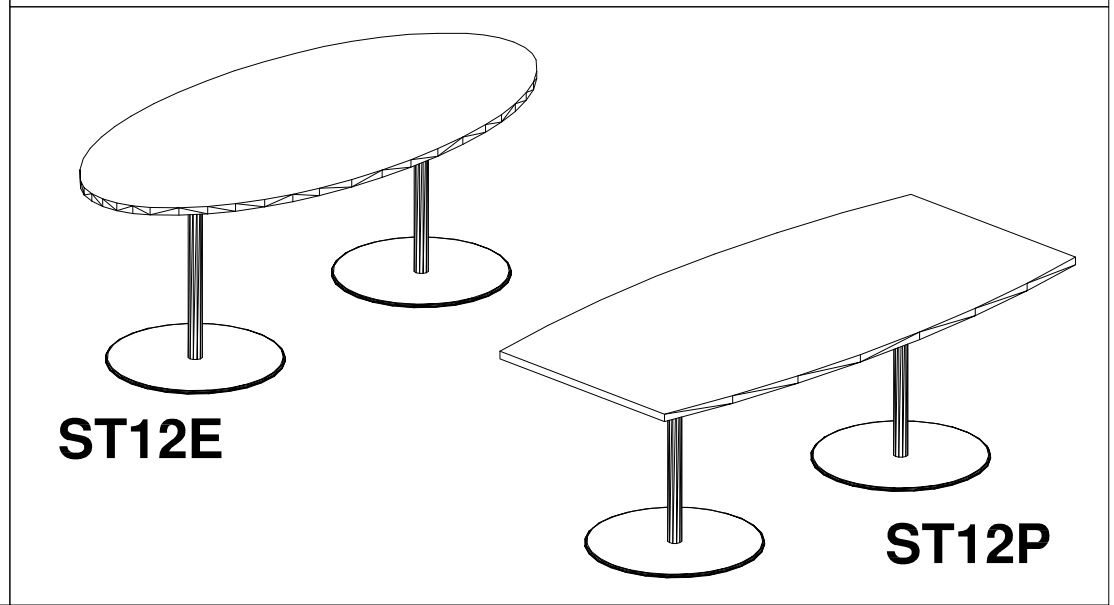
ST12E
ST12P